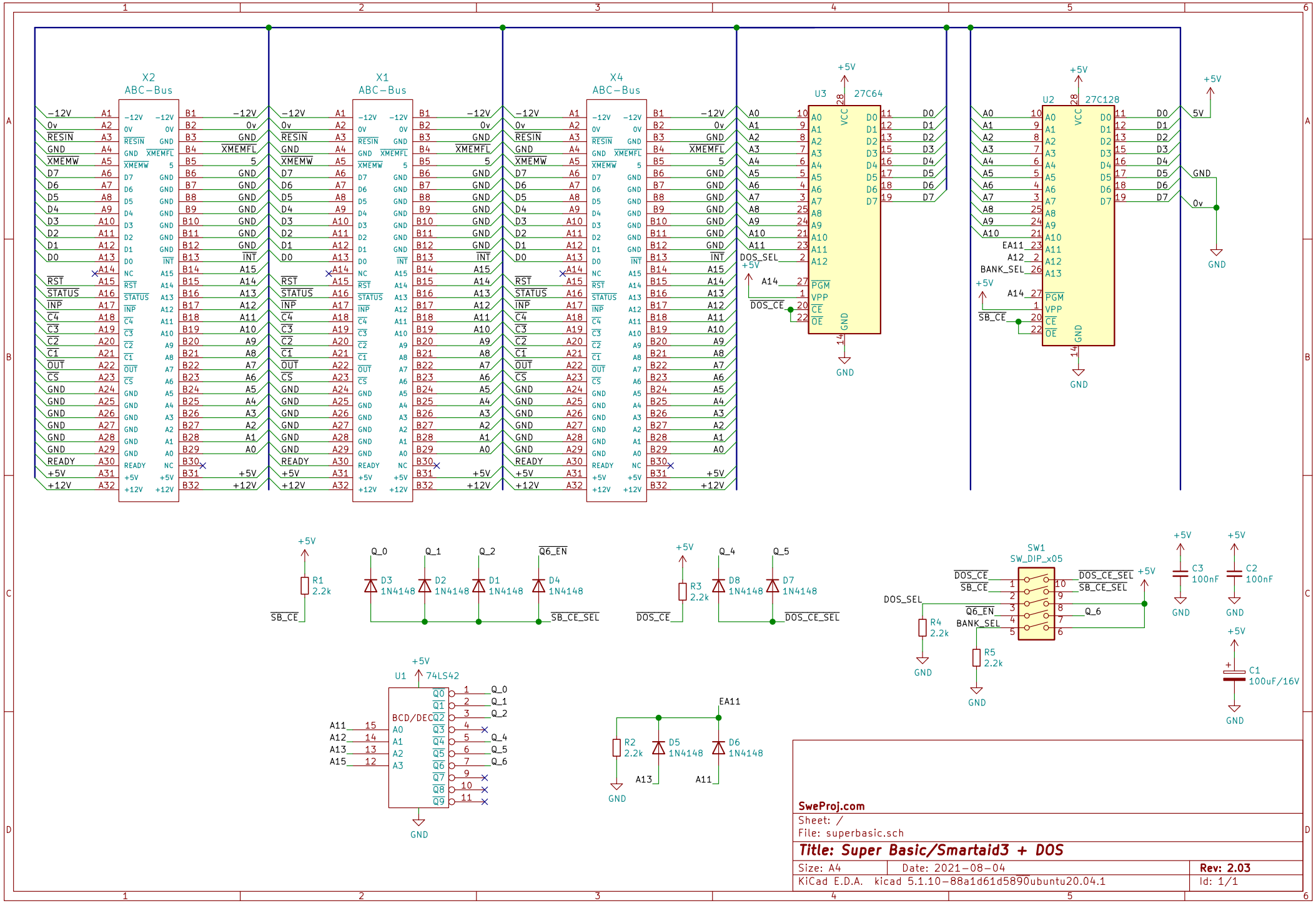

SweProj.com

Sheet: /

File: superbasic.sch

Title: Super Basic/Smartaid3 + DOS

Size: A4	Date: 2021-08-04	Rev: 2.03
KiCad E.D.A. kicad 5.1.10-88a1d61d5890ubuntu20.04.1		Id: 1/1